MEBA**eco** 410 DG

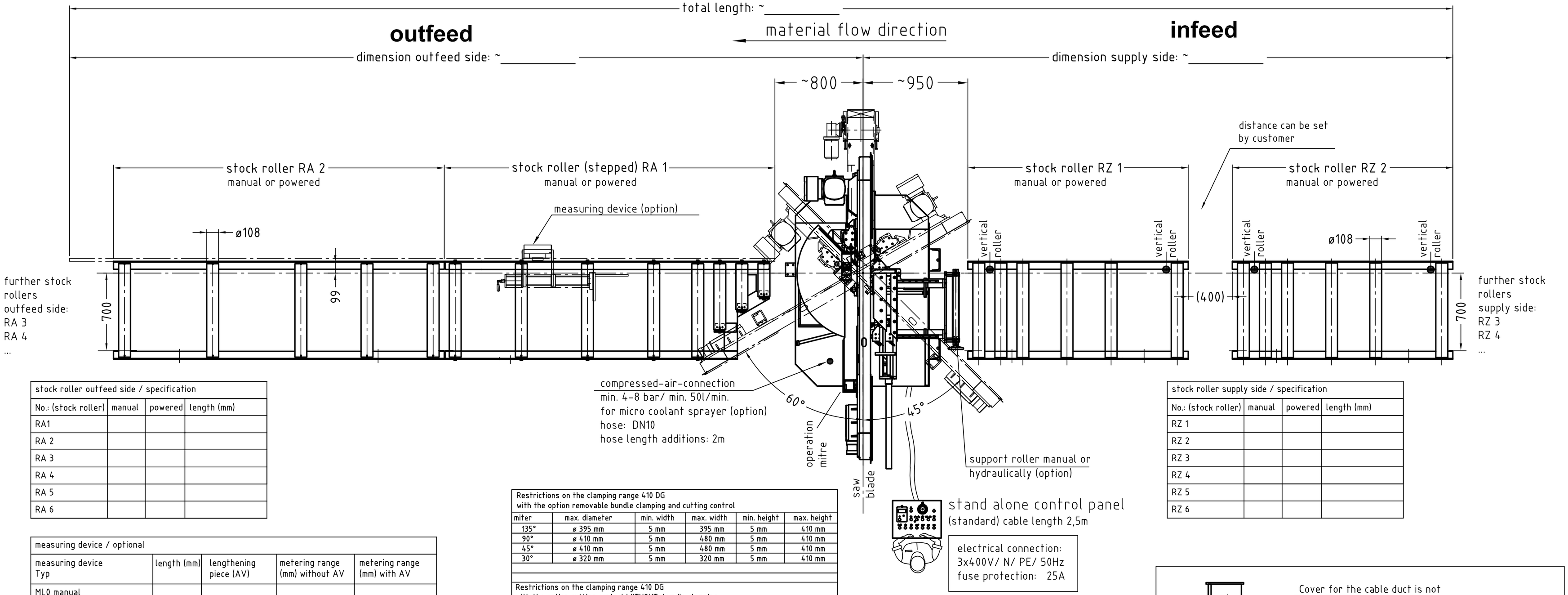

stock roller outfeed side / specification			
No.: (stock roller)	manual	powered	length (mm)
RA1			
RA 2			
RA 3			
RA 4			
RA 5			
RA 6			

stock roller supply side / specification			
No.: (stock roller)	manual	powered	length (mm)
RZ 1			
RZ 2			
RZ 3			
RZ 4			
RZ 5			
RZ 6			

stand alone control panel
(standard) cable length 2,5m

electrical connection:
3x400V/ N/ PE/ 50Hz
fuse protection: 25A

measuring device / optional				
measuring device Typ	length (mm)	lengthening piece (AV)	metering range (mm) without AV	metering range (mm) with AV
ML0 manual				
MLD manual				
MLDV manual				
MLA automatic				
MLAV automatic				
MS3 automatic				

Restrictions on the clamping range 410 DG
with the option removable bundle clamping and cutting control

miter	max. diameter	min. width	max. width	min. height	max. height
135°	ø 395 mm	5 mm	395 mm	5 mm	410 mm
90°	ø 410 mm	5 mm	480 mm	5 mm	410 mm
45°	ø 410 mm	5 mm	480 mm	5 mm	410 mm
30°	ø 320 mm	5 mm	320 mm	5 mm	410 mm

Restrictions on the clamping range 410 DG
with the option cutting control WITHOUT bundle clamping

miter	max. diameter		max. width		max. height
135°	ø 395 mm		395 mm		410 mm
90°	ø 410 mm		700 mm		410 mm
45°	ø 410 mm		490 mm		410 mm
30°	ø 320 mm		320 mm		410 mm

rest piece length without bundle clamping manual: 75mm
rest piece length with bundle clamping manual: 260mm

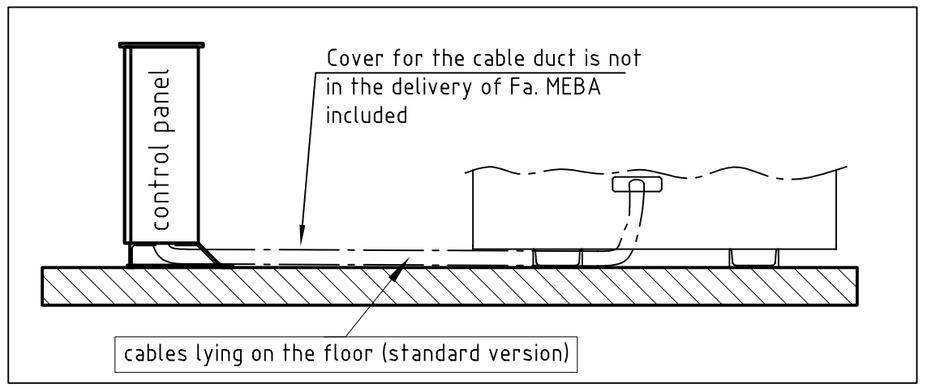

Restrictions of the clamping range 410 DG
with option: Bundle clamping
(without cutting control)
width: 5 - 480mm/ height: 5- 410mm

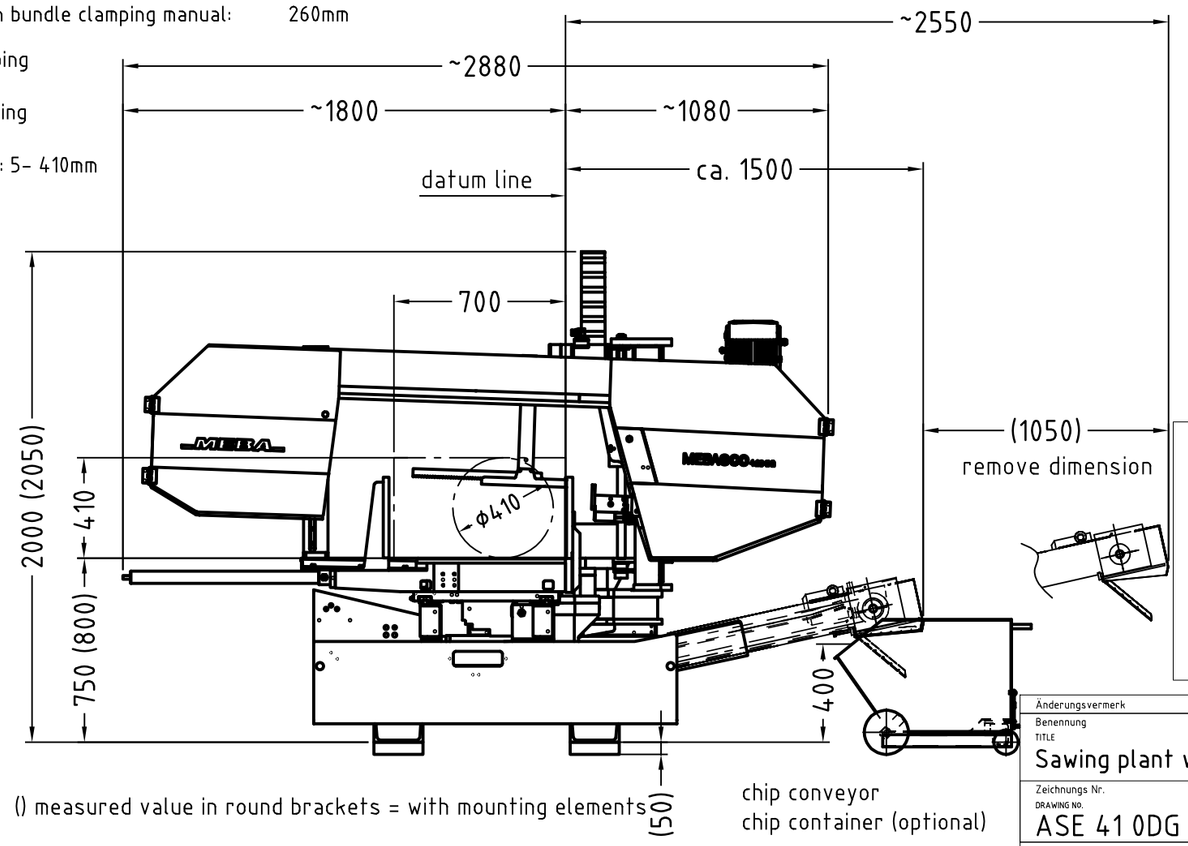

() measured value in round brackets = with mounting elements

working height 750mm
(without mounting elements)

Eventually neccesary safety equipments like enclosures,barriers, etc., are not included in the offer. These equipments can be plot corresponding to the valid instructions on the part of the builder, or through a separate offer requested at MEBA.

At the installation location there has to be an at-grade base plate with a niveau tolerance of max. ±20mm. The base plate has to have a sufficient sturdiness for mounting dowels M12x120 and has to resist a pressure load of min. 30kg/cm^2.
Because of the manufacturing tolerances , the drilling patterns for the fixing dowels can not be determined in advance, they must be drilled during installation! !

optional accessories (just what is shown on drawing)		
article	yes	no
control panel -stand alone (mark desired location)	X	—
support roller manual		
support roller hydraulically		
chip conveyor		
chip container		
micro coolant sprayer		
mounting elements working height = 800mm		

Please confirm electrical datas:

electrical connection
(MEBA-standard):
3x400V /N / PE/ 50Hz yes ☐ no ☐

different electrical connection: _____
(autotransformer might be required !!!)

customer:

customer number:

Änderungsvermerk | Index | Datum / Namen

Benennung / TITLE: Sawing plant with MEBAeco 410 DG

Maßstab / SCALE: 1:25 | Format / SIZE / DIN: A2

Datum / DATE: 13.07.10 | Name / NAME: HU

Zeichnungs Nr. / DRAWING NO.: ASE 41 0DG 01

Auftragsnummer / ORDER NO.

Angebotsnummer / OFFER NO.

Maschinen-Nr. / MASCHINE NO.

Kunde; Ort / CUSTOMER; CITY

Blatt 1 von 1

MEBA
METALL-BANDSÄGEMASCHINEN GmbH
72589 WESTERHEIM

Copyright DIN 34
Technische Änderungen vorbehalten
TECHNICAL CHANGES KEPT IN RESERVE